DRUM-TYPE GAS METERS
TG 0.5 STAINLESS STEEL 6 BAR • DATA-SHEET

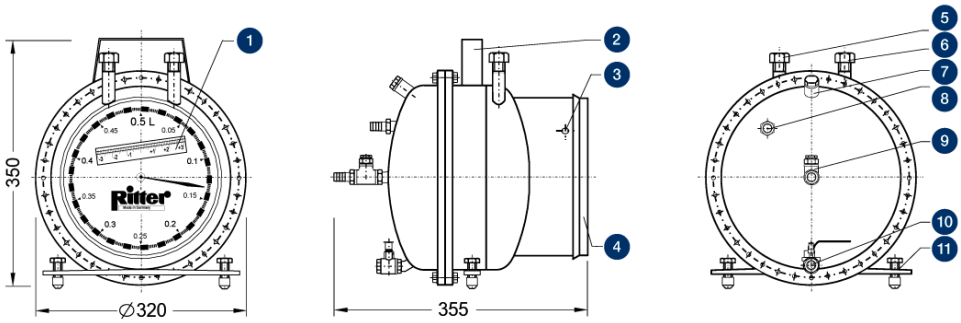

Legend

1. Filling level indicator “HPLI”
2. Handle
3. Pulse generator port
4. Removable cover
5. Support for thermometer (packing fl.)
6. Support for thermometer (gas)
7. Filling nozzle
8. Gas outlet
9. Gas inlet
10. Drainage faucet
11. Levelling foot

Performance Data

Minimum flow Q_{min}	1	ltr/h
Standard flow $Q_{standard}$	50	ltr/h
Maximum flow Q_{max}	60	ltr/h
Measurement accuracy at standard flow	0.2	%
Measurement accuracy across measuring range	0.5	%
Measuring drum volume	0.5	ltr/U
Packing liquid quantity, approx	4	ltr

Maximum gas inlet pressure	**6**	**bar**
Minimum differential pressure [1]	0.2	mbar
Minimum dial division	0.002	ltr
Maximum indication value [2]	9,999,999.9	ltr
Connection gas in/outlet	hose barb	
Inside-Ø hose barb		
Outside-Ø	15	mm

[1] Differential pressure (= pressure loss) gas inlet gas outlet
[2] Standard Totalizing Roller Counter

Models (materials)

Model	Casing	Measuring drum	Width	Height	Depth	Weight (without packing liquid)	Max. constant use temperature
1	Stainless Steel	PVC-grey	320 mm	350 mm	355 mm	14.3 kg	40 °C
2	Stainless Steel	PE-el	320 mm	350 mm	355 mm	14.1 kg	60 °C
3	Stainless Steel	PP-grey	320 mm	350 mm	355 mm	13.4 kg	60 °C
4	Stainless Steel	PVDF	320 mm	350 mm	355 mm	14.0 kg	60 °C

Caution

Before and after measurements with **oxygen** purge the meter with an inert gas to avoid the danger of **explosion**!

For chemical resistance properties please contact your RITTER distribution partner!

Standard Equipment

- 8-digit Totalizing Roller Counter
- Bubble level for levelling
- Level and Levelling Feet
- Magnetic Coupling (between the measuring drum and counting mechanism) , for an absolutely liquid-tight casing
- Multi-Chamber Measuring Drum
- Supports for Thermometer and Manometer
- Viton sealing

Built-in Options

- Pulse Generator , standard or Ex-proof version (for connecting Electronic Display Unit/Computer
- LCD Display , resettable, 8-digit (replaces Totalizing Roller Counter)
- High Precision Packing Liquid Level Indicator »HPLI« , for packing liquid level

Accessories

- Data Acquisition Software »RIGAMO« , (for Windows)
- Thermometer Gas (TG) , measuring range 0 °C to +60 °C
- Thermometer Packing Liquid (TG) , measuring range 0 °C to +60 °C
- Manometer for pressure pmax ≤ 10 bar , measuring range 0-6 / 0-10 bar; available for higher pressure ranges
- Electronic Display Unit »EDU 32 FP« , displays volume and calculates flow rate via RS232 and analog-output in realtime (pulse generator required)

V 1.2 / Rev. 2019-01-14 / Subject to alterations.

The most recent version of this data-sheet can be found at https://www.ritter.de/en/data-sheets/tg-0-5-stainless-steel-6-bar/

Dr.-Ing. RITTER Apparatebau GmbH & Co. KG · Coloniastrasse 19-23 · D-44892 Bochum · Germany
For questions please contact mailbox@ritter.de or your any local distributor at https://www.ritter.de/en/worldwide/